MODEL F485C

REV B

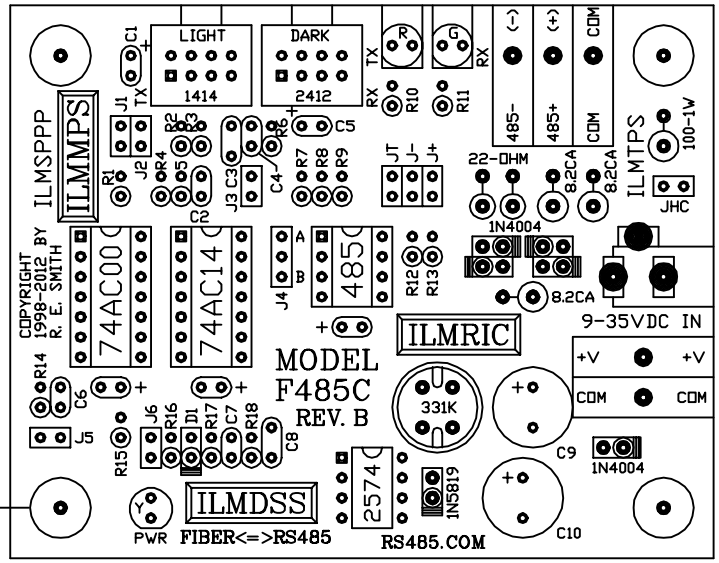

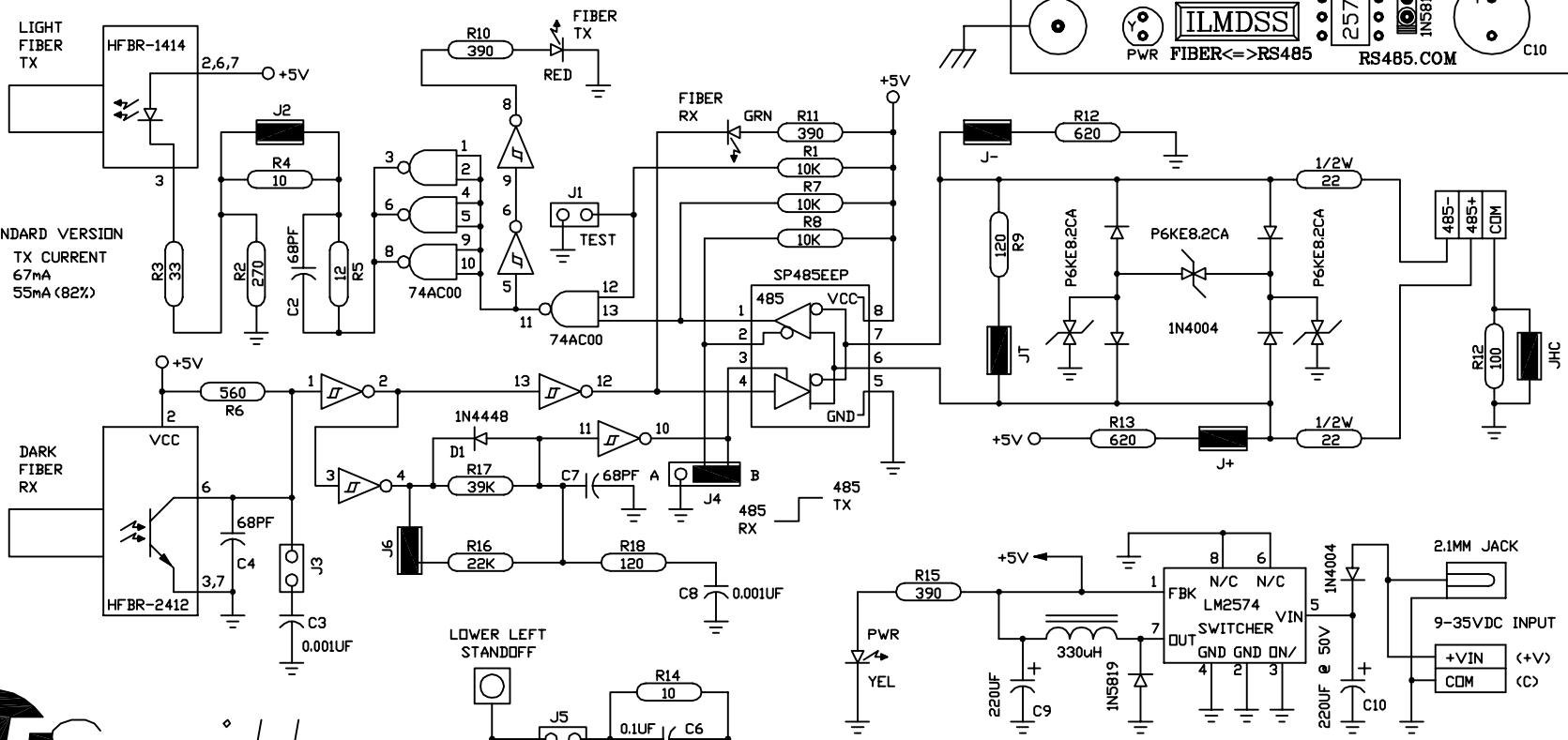

RESmith
WWW.RS485.COM
10330 CHESTER ROAD, CINCINNATI, OHIO 45215
513-874-4796

This drawing is the property of R. E. SMITH and shall not be used except with the written permission of R. E. SMITH, no copies shall be made of it and all proprietary rights in the matter contained in this drawing are the property of R. E. SMITH.
COPYRIGHT - R. E. SMITH, 1998-2012

SHEET 1 OF 1	F485C	DRAWN BY RES	SUBJECT FIBER TO RS485
		DATE 12-21-11	FOR AUTO CONVERSION
		SCALE NONE	RES R. E. SMITH 10330 CHESTER ROAD CINCINNATI, OHIO 45215
		CHKD. BY RES	DWG. NO. F485C REV. B