MODEL FCASX3

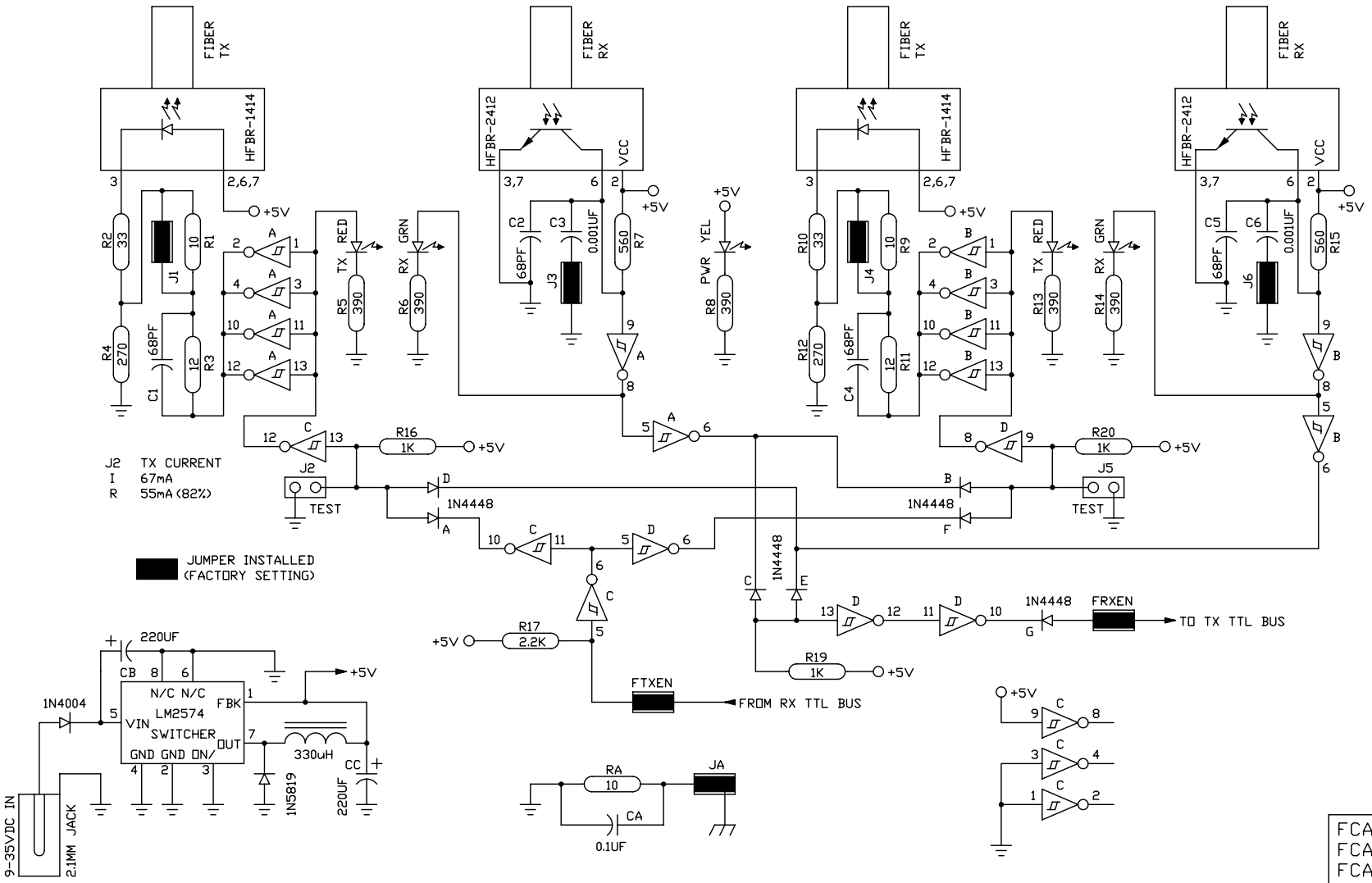

FCASX3CPU
FCASX3FR
FCASX3485

FCASX3SS

R. E. SMITH
4311 TYLERSVILLE ROAD
HAMILTON, OHIO 45011
513-874-4796
513-874-1236 Fax.
www.rs485.com

This drawing is the property of R. E. SMITH and shall not be used except with the written permission of R. E. SMITH, no copies shall be made of it and all proprietary rights in the matter contained in this drawing are the property of R. E. SMITH.
COPYRIGHT - R. E. SMITH, 2001

DRAWN BY RES	SUBJECT FIBER-RS485/232		
DATE 5-26-01	FOR ADDRESSABLE CONV.		
SCALE NONE	RES R. E. SMITH 4311 TYLERSVILLE RD. HAMILTON, OHIO 45011	DWG. NO. FCASX3FR	REV. A1
SHEET 1 OF 1 / FCASX3FR	CHKD. BY RES		