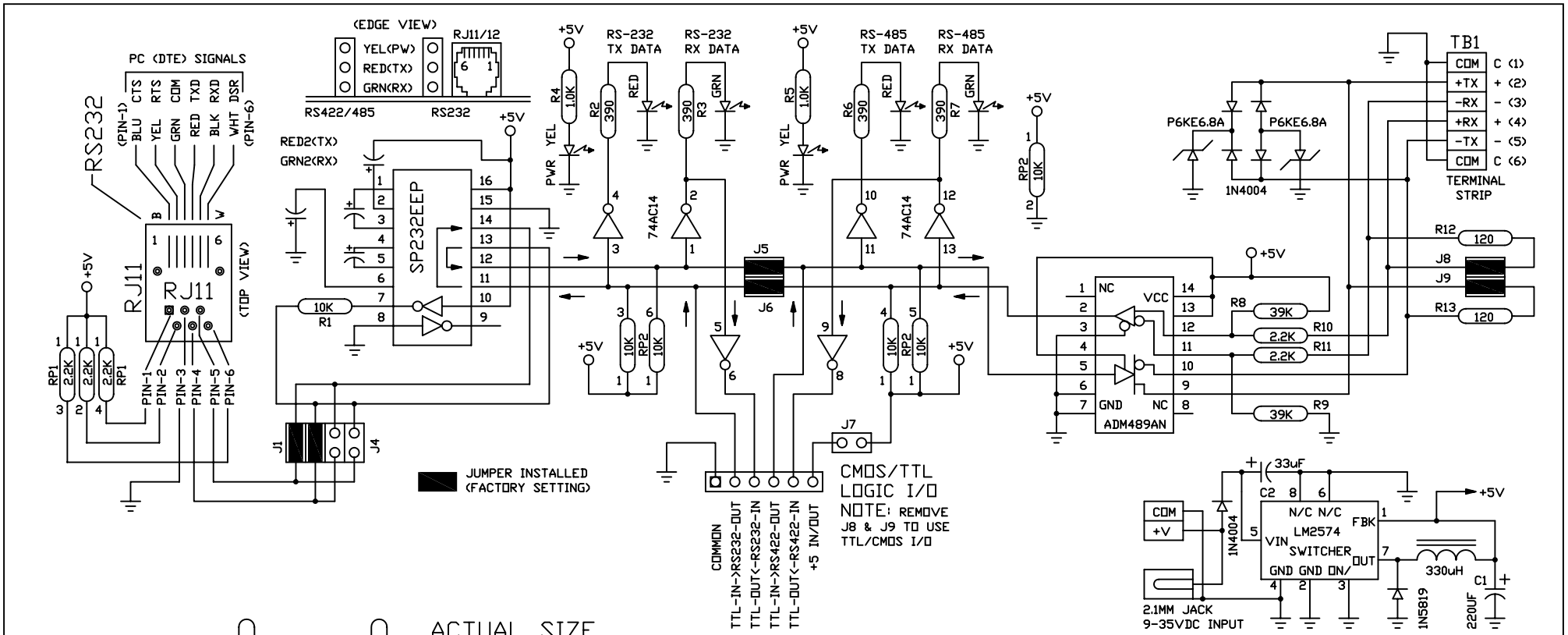

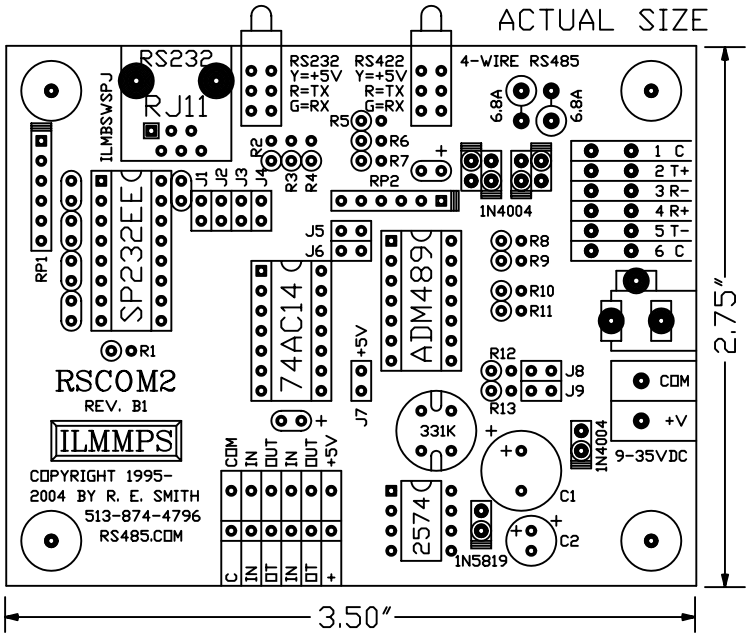

MODEL RSCOM2 REV. B1

RESmith
WWW.RS485.COM
4311 R. E. Smith Drive, Hamilton, Ohio 45011
513-874-4796

This drawing is the property of R. E. SMITH and shall not be used except with the written permission of R. E. SMITH, no copies shall be made of it and all proprietary rights in the matter contained in this drawing are the property of R. E. SMITH. COPYRIGHT - R. E. SMITH, 1995 - 2004	DRAWN BY RES	SUBJECT RS232/RS485/TTL	
	DATE 6-14-04	FOR COMM CONVERSION	
	SCALE NONE	RES R. E. SMITH 4311 R. E. SMITH DR. HAMILTON, OHIO 45011	DWG. NO. RSCOM2 / REV. B1
SHEET 1 OF 1 / RSCOM2	CHKD. BY RES		