MODEL USBA4 REV. B

USB<=>RS485

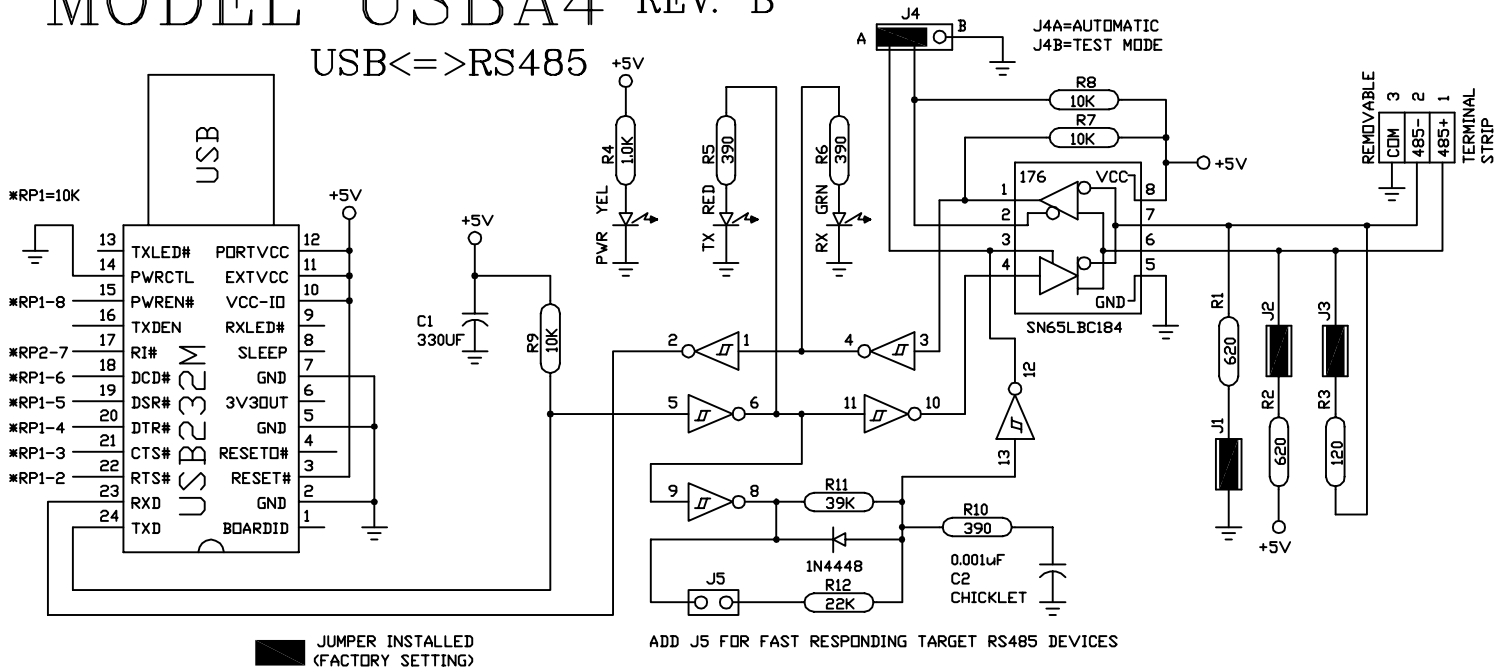

GENERAL INFO.

FAST AUTOMATIC AUTO TX-ENABLE USB TO RS485 CONVERTER FOR 2-WIRE APPLICATIONS AT BAUD RATES UP TO 230.4K. LEDs FOR POWER, TX DATA, AND RX DATA. ONBOARD BIAS AND TERMINATION WITH ONE-QUARTER UNIT LOAD TI SN65BLC184N DRIVER IC WITH SUPERIOR TRANSIENT PROTECTION. TEST MODE JUMPER, AND IMPROVED AUTO TRANSMIT ENABLE TIMING.

SPECIFICATIONS

1) SIZE: 2.50" X 2.00" X 1.2" (PC BOARD) WITH CONNECTORS: 2.50" X 2.50"
2) MOUNTING HOLES: 4-PLACES 2.00" X 1.50" (#6 HARDWARE)
3) TI SN65BLC184N RS485 DRIVER IC BUILT-IN TRANSIENT PROTECTION
4) TEMPERATURE RANGE: 0C TO +70C
5) HUMIDITY: 10-90% RH NON-CONDENSING
6) BAUD: 300-230.4K (LIMITED SLEW)
7) SPECIAL UNITS TO 921.6KBPS
8) TYPICAL POWER: UNDER 0.5W
9) HALF-DUPLEX 2-WIRE RS485

S1 = 2.50" X 2.00" (ACTUAL SIZE)

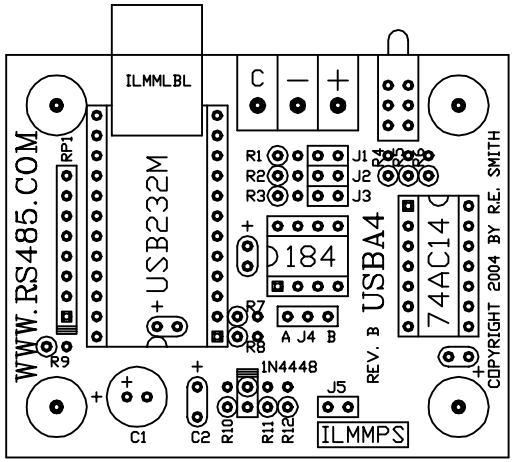

LINK: rs485.com/pusba4.html

RESmith
WWW.RS485.COM
10330 CHESTER ROAD, CINCINNATI, OHIO 45215
513-874-4796

www.rs485.com

This drawing is the property of R. E. SMITH and shall not be used except with the written permission of R. E. SMITH, no copies shall be made of it and all proprietary rights in the matter contained in this drawing are the property of R. E. SMITH.
COPYRIGHT - R. E. SMITH, 2000-2013

DRAWN BY RES	SUBJECT USB<=>RS485		
DATE 7-16-04 REV 9-20-13	FOR AUTOMATIC CONV.		
SCALE NONE	RES R. E. SMITH 10330 CHESTER ROAD CINCINNATI, OH 45215	DWG. NO. USBA4	REV. B
SHEET 1 OF 1 / USBA4	CHKD. BY RES		