MODEL RSFC44T

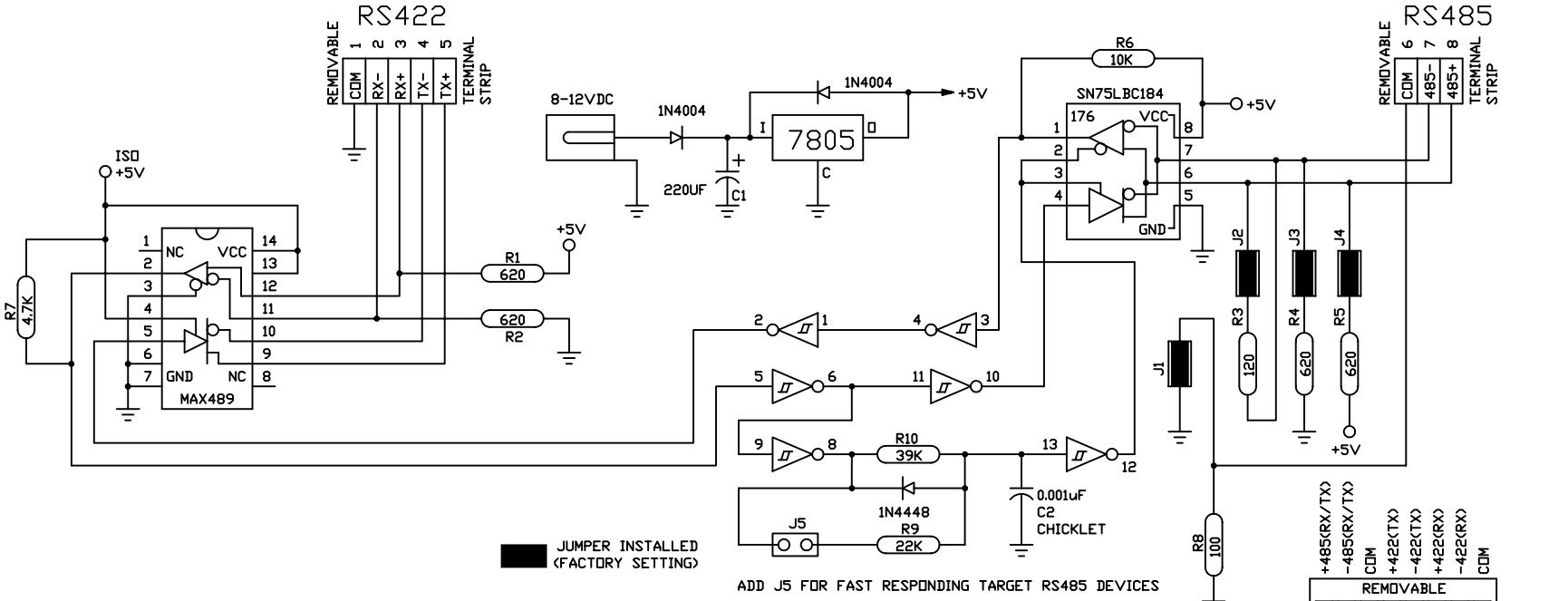

ACTUAL SIZE (1:1)

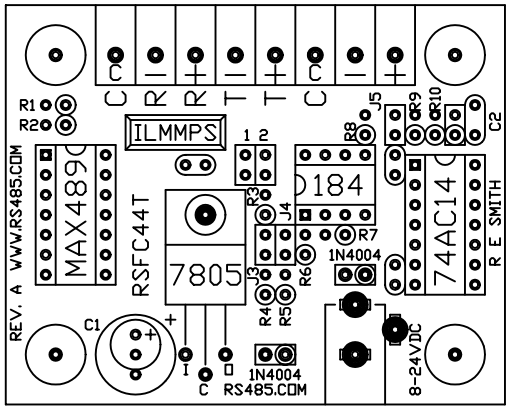

GENERAL INFO.

FAST AUTOMATIC, AUTO TX-ENABLE RS485 TO RS422 CONVERTER FOR 2-WIRE TO 4-WIRE APPLICATIONS AT DATA RATES UP TO 115.2K+. ONBOARD BIAS AND TERMINATION WITH ONE-HALF UNIT LOAD TI SN75BLC184N DRIVER IC WITH SUPERIOR TRANSIENT PROTECTION.

SPECIFICATIONS

1) SIZE: 2.50" X 2.00" X 0.9" (PC BOARD) WITH CONNECTORS: 2.50" X 2.25"
2) MOUNTING HOLES: 4-PLACES 2.00" X 1.50" (#6 HARDWARE)
3) TI SN75BLC184N RS485 DRIVER IC BUILT-IN TRANSIENT PROTECTION
4) TEMPERATURE RANGE: 0C TO 65C
5) HUMIDITY: 10-90% RH NON-CONDENSING
6) BAUD: 300-115.2K+ (LIMITED SLEW)
7) OPERATING VOLTAGE: 8-24VDC
8) TYPICAL POWER: UNDER 0.5W
9) HALF-DUPLEX 2-WIRE RS485 TO FULL-DUPLEX 4-WIRE RS422.

R.E. SMITH
4311 TYLERSVILLE ROAD
HAMILTON, OHIO 45011
(513) 874-4796

www.rs485.com

OPTIONAL ENCLOSURE, AND POWER SUPPLY ARE AVALIABLE.

This drawing is the property of R. E. SMITH and shall not be used except with the written permission of R. E. SMITH, no copies shall be made of it and all proprietary rights in the matter contained in this drawing are the property of R. E. SMITH.
COPYRIGHT - R. E. SMITH, 2000

SHEET 1 OF 1	RSFC44T	DRAWN BY RES	SUBJECT RS485/RS422
		DATE 2-17-00	FOR AUTOMATIC CONV.
		SCALE NONE	RES R. E. SMITH 4311 TYLERSVILLE RD. HAMILTON, OHIO 45011
		CHKD. BY RES	DWG. NO. RSFC44T REV. A